935.557
FUTURE FINISHED

12" TALLER FND. WALL

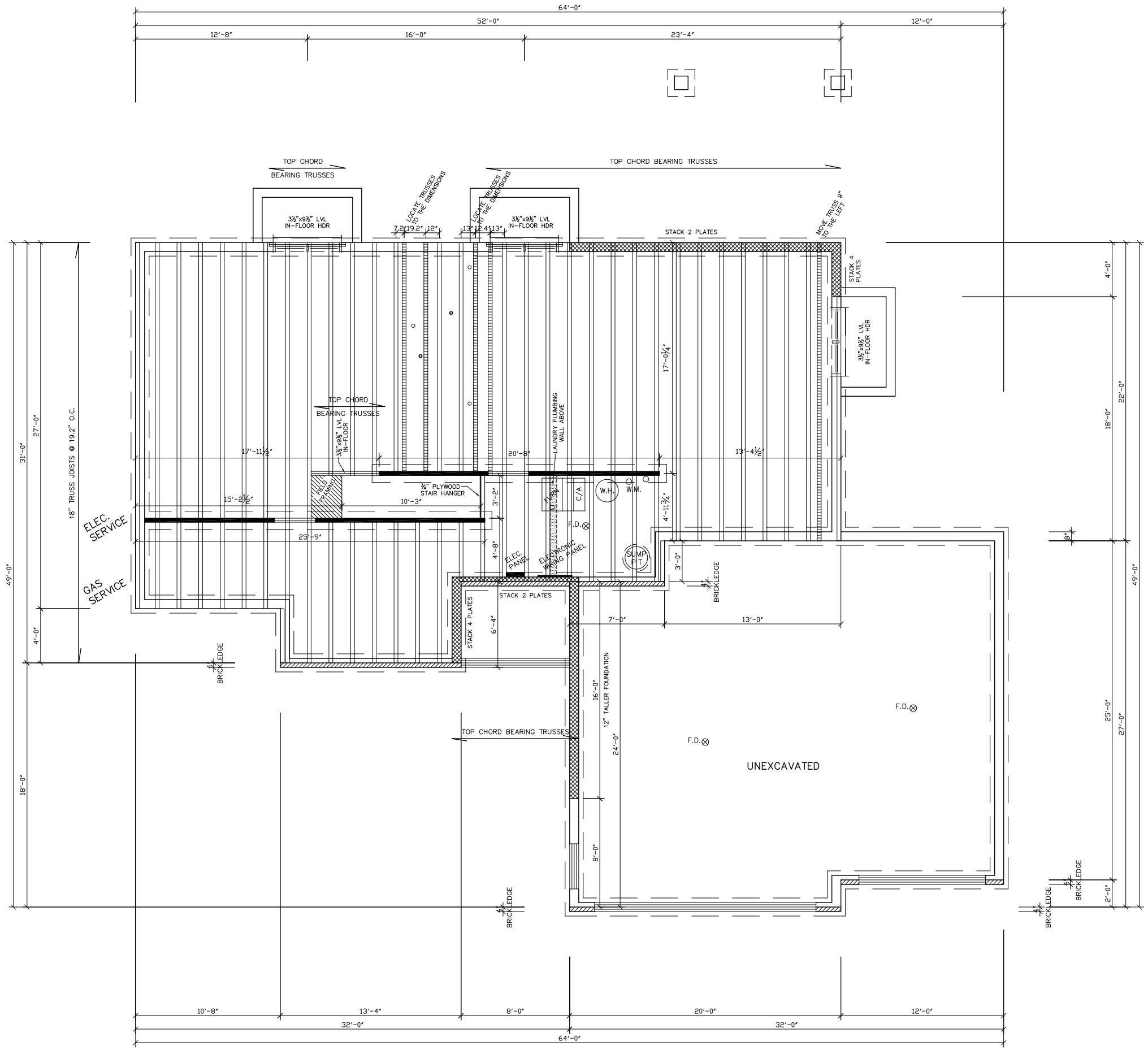

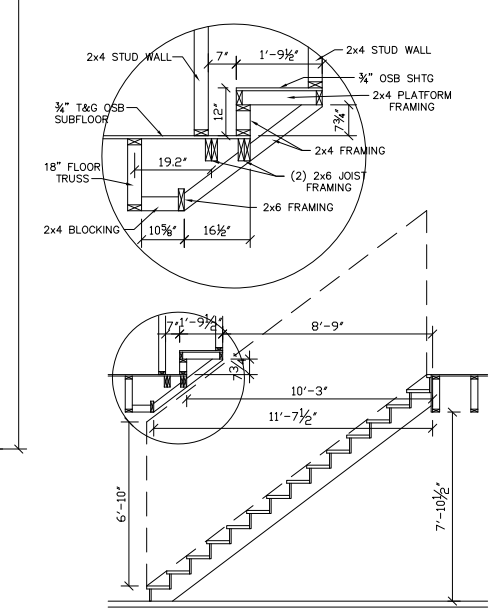

STAIR SECTION

JOB NO.	5805
SCALE	1/4"=1'-0"
R/VSD.	J-2708
JOB NO.	5487
DATE	2-2-18
DWN. BY	JOE R.
PLAN NO.	J-2830
SHEET TITLE	LOWER LEVEL FLOOR PLAN
SHEET	2 OF 4
PROJECT TITLE	HOME FOR MODEL
AT	5716 E. MAHOGANY CIR.
BY	RONNING HOMES

RONNING HOMES
4401 EAST 6TH STREET
SIOUX FALLS, SOUTH DAKOTA 57103
PHONE (605) 336-6000

RONNING
CUSTOM HOMES & NEIGHBORHOODS

THIS IS THE PERSONAL PROPERTY OF HOME SUPPLY COMPANY, AND ALL USE IS FORBIDDEN EXCEPT WITH WRITTEN CONSENT